Boy Scout Merit Badge Requirements

American Heritage

1. Read the Declaration of Independence. Pay close attention to the section that begins with "We hold these truths to be self-evident" and ends with "to provide new Guards for future security." Rewrite that section in your own words, making it as easy to understand as possible. Then share your writing with your merit badge counselor and discuss the importance of the Declaration of Independence.

2. Do TWO of the following:
    A. Select two individuals from American history, one a political leader (a president, senator, etc.) and the other a private citizen (a writer, religious leader, etc.). Find out about each person's accomplishments and compare the contributions each has made to America's heritage.
    B. With your counselor's approval, choose an organization that has promoted some type of positive change in American society. Find out why the organization believed this change was necessary and how it helped to accomplish the change. Discuss how this organization is related to events or situations from America's past.
    C. With your counselor's approval, interview two veterans of the U.S. military. Find out what their experiences were like. Ask the veterans what they believe they accomplished.
    D. With your counselor's approval, interview three people in your community of different ages and occupations. Ask these people what America means to them, what they think is special about this country, and what American traditions they feel are important to preserve.

3. Do the following:
    A. Select a topic that is currently in the news. Describe to your counselor what is happening. Explain how today's events are related to or affected by the events and values of America's past.
    B. For each of the following, describe its adoption, tell about any changes since its adoption, and explain how each one continues to influence Americans today: the flag, the Pledge of Allegiance, the seal, the motto, and the national anthem.
    C. Research your family's history. Find out how various events and situations in American history affected your family. Share what you find with your counselor. Tell why your family came to America.

4. Do TWO of the following:
    A. Explain what is meant by the National Register of Historic Places. Describe how a property becomes eligible for listing. Make a map of your local area, marking the points of historical interest. Tell about any National Register properties in your area. Share the map with your counselor, and describe the historical points you have indicated.
    B. Research an event of historical importance that took place in or near your area. If possible, visit the place. Tell your counselor about the event and how it affected local history. Describe how the area looked then and what it now looks like.
    C. Find out when, why, and how your town or neighborhood started, and what ethnic, national, or racial groups played a part. Find out how the area has changed over the past 50 years and try to explain why.
    D. Take an active part in a program about an event or person in American history. Report to your counselor about the program, the part you took, and the subject.
    E. Visit a historic trail or walk in your area. After your visit, share with your counselor what you have learned. Discuss the importance of this location and explain why you think it might qualify for National Register listing.

5. Do ONE of the following:
    A. Watch two motion pictures (with the approval and permission of your counselor and parent) that are set in some period of American history. Describe to your counselor how accurate each film is with regard to the historical events depicted and also with regard to the way the characters are portrayed.
    B. Read a biography (with your counselor's approval) of someone who has made a contribution to America's heritage. Tell some things you admire about this individual and some things you do not admire. Explain why you think this person has made a positive or a negative contribution to America's heritage.
    C. Listen to recordings of popular songs from various periods of American history. Share five of these songs with your counselor, and describe how each song reflects the way people felt about the period in which it was popular. If a recording is not available, have a copy of the lyrics available.

6. Discuss with your counselor the career opportunities in American heritage. Pick one that interests you and explain how to prepare for this career. Discuss what education and training are required for this career.

Boy Scout Merit Badge Requirements

Art

1. Tell a story with a picture or pictures or using a 3-D rendering.

2. Do ONE of the following.

   a. Design something useful. Make a sketch or model of your design and get your counselor's approval before you proceed. Then create a promotional piece for the item using a picture or pictures.
   b. Design a logo. Share your design with your counselor and explain the significance of your logo. Then, with your parent's permission and your counselor's approval, put your logo on Scout equipment, furniture, ceramics, or fabric.

3. Render a subject of your choice in FOUR of these ways:

   a. Pen and ink,
   b. Watercolors,
   c. Pencil,
   d. Pastels,
   e. Oil paints,
   f. Tempera,
   g. Acrylics,
   h. Charcoal
   i. Computer drawing or painting

4. With your parent's permission and your counselor's approval, visit a museum, art exhibit, art gallery, artists' co-op, or artist's workshop Find out about the art displayed or created there. Discuss what you learn with your counselor.

5. Find out about three career opportunities in art. Pick one and find out the education, training, and experience required for this profession. Discuss this with your counselor, and explain why this profession might interest you.

Boy Scout Merit Badge Requirements

Auto Maintenance

NOTE: You will need access to a car or truck and its owner's manual to meet some of the requirements for this merit badge.

1. Discuss with your counselor the safety equipment, tools, and clothing used while checking or repairing a motor vehicle. Use this equipment, tools, and/or clothing (when needed or called for) in meeting the requirements for this merit badge.

2. **General Maintenance, Safety, and Registration** Do the following:

    a. Review the maintenance chart in the owner's manual. Explain the requirements and time limits.
    b. Demonstrate how to check the following:
        1. Brake Fluid
        2. Engine Oil
        3. Coolant
        4. Power steering fluid
        5. Windshield washer fluid
        6. Transmission fluid
        7. Battery fluid (if possible) and condition of the battery terminals
    c. Locate the fuse boxes; determine the size of fuses. Demonstrate the proper replacement of burned-out fuses.
    d. Demonstrate how to check the condition and tension of belts and hoses.
    e. Check the lighting in the vehicle, including instrument, warning, and exterior bulbs.
    f. Locate and check the air filter.
    g. Explain the purpose, importance, and limitations of safety belts and passive restraints.
    h. Find out the requirements for the state inspection in your state, including how often a vehicle needs to be inspected.
    i. Explain the importance of registering a vehicle and find out the annual registration fee for renewing your family car's registration.

3. **Dashboard**. Do the following:

    a. Explain the function of the fuel gauge, speedometer, tachometer, oil pressure, and engine temperature gauge. Point out each one on the instrument cluster.
    b. Explain the symbols that light up on the dashboard and the difference between the yellow and red symbols. Explain each of the indicators on the dashboard, using the owner's manual, if necessary.

4. **Tires**. Do the following:

    a. Explain the difference between tire manufacturer's and vehicle manufacturer's specifications and show where to find them.
    b. Demonstrate how to check pressure and properly inflate a tire. Check the spare tire and make sure it is ready for use.
    c. Explain why wheel alignment is important to the life of a tire. Explain camber, caster, and toe-in adjustments on wheel alignment.
    d. Explain the purpose of the lateral-wear bar indicator.
    e. Explain how to dispose of old tires in accordance with local laws and regulations.

5. **Engine**. Do the following:

    a. Explain how an internal combustion engine operates. Tell the differences between gasoline and diesel engines. Explain how a gasoline-electric hybrid vehicle is powered.
    b. Explain the purpose of engine oil. Explain the API service code, the SAE number, and the viscosity rating.
    c. Explain where to find the recommended oil type and the amount of oil to be used in the vehicle's engine.

6. **Cooling system**. Do the following:

    a. Explain the need for coolant in the cooling system.
    b. Explain how to flush and change the engine coolant in the vehicle, and how to properly dispose of the used coolant.

7. **Fuel system**. Do the following:

    a. Explain how the air and fuel systems work together and why it is necessary to have an air filter and fuel filter.
    b. Explain how a how a fuel injection system works and how an on-board computer works with the fuel injection system.

8. **Ignition and electrical systems**. Do the following:

    a. Diagram and explain the parts of the electrical system.
    b. Explain the cylinder engine sequence.
    c. Explain the purpose of the spark gap.
    d. Demonstrate how to change the spark plugs in any internal combustion engine (lawn mower, dirt bike, motorcycle).
    e. Demonstrate how to safely connect jumper cables to your car battery.

9. **Drive Train**. Do the following:

    a. Diagram the drive train and explain the different parts.

b. Explain the difference between automatic and standard transmissions.
c. Explain the types of automatic transmission fluid.
d. Explain the types of lubricants used in a standard transmission and in the differential.
e. Explain the difference between front-wheel, rear- wheel, and four-wheel drive.

10. **Brake System**. Do the following:

a. Explain the brake system (including anti-lock systems) and how it operates.
b. Explain the differences between disc and drum systems.
c. Demonstrate how to check the condition of a vehicle's brake system. After checking make recommendations for repairs (if necessary).

11. Do two of the following:

a. Determine the value of three different vehicles you are interested in purchasing. One must be new and one must be used; the third vehicle can be new or used. For each vehicle, find out the requirements and cost of automobile insurance to include basic liability and options for collision, comprehensive, towing, and rental car. Using the three vehicles you chose and with your merit badge counselor's assistance, complete the operation/maintenance chart provided in the merit badge pamphlet. Use this information to determine the operating cost per mile for each vehicle, and discuss what you learn with your counselor.
b. Choose a car cleaner and wax product for a vehicle you want to clean. Explain clear-coat paint and the precautions necessary for care. Clean the vehicle, both inside and out, and wax the exterior. Use a vinyl and rubber protectant (on vinyl tops, rubber door seals, sidewalls, etc.) and explain the importance of the protectant.
c. Locate the manufacturer's jack. Use the jack to demonstrate how to engage the jack correctly on the vehicle, then change a tire correctly.
d. Perform an oil filter and oil change on a vehicle. Explain how to properly dispose of the used oil and filter.

12. Find out about three career opportunities in the automotive industry. Pick one and find out about the education, training, and experience required for this profession. Discuss this with your counselor, and explain why this profession might interest you.

Boy Scout Merit Badge Requirements

Chemistry

1. Do EACH of the following activities:

   a. Describe three examples of safety equipment used in a chemistry laboratory and the reason each one is used.
   b. Describe what a material safety data sheet (MSDS) is and tell why it is used.
   c. Obtain an MSDS for both a paint and an insecticide. Compare and discuss the toxicity, disposal, and safe-handling sections for these two common household products.
   d. Discuss the safe storage of chemicals. How does the safe storage of chemicals apply to your home, your school, your community, and the environment?

2. Do EACH of the following activities:

   a. Predict what would happen if you placed an iron nail in a copper sulfate solution. Then, put an iron nail in a copper sulfate solution. Describe your observations and make a conclusion based on your observations. Compare your prediction and original conclusion with what actually happened. Write the formula for the reaction that you described.
   b. Describe how you would separate sand from water, table salt from water, oil from water, and gasoline from motor oil. Name the practical processes that require these kinds of separations.
   c. Describe the difference between a chemical reaction and a physical change.

3. Construct a Cartesian diver. Describe its function in terms of how gases in general behave under different pressures and different temperatures. Describe how the behavior of gases affects a backpacker at high altitudes and a scuba diver underwater.

4. Do EACH of the following activities:

   a. Cut a round onion into small chunks. Separate the onion chunks into three equal portions. Leave the first portion raw. Cook the second portion of onion chunks until the pieces are translucent. Cook the third portion until the onions are caramelized, or brown in color. Taste each type of onion. Describe the taste of raw onion versus partially cooked onion versus caramelized onion. Explain what happens to molecules in the onion during the cooking process.
   b. Describe the chemical similarities and differences between toothpaste and an abrasive household cleanser. Explain how the end use or purpose of a product affects its chemical formulation.

c. In a clear container, mix a half-cup of water with a tablespoon of oil. Explain why the oil and water do not mix. Find a substance that will help the two combine, and add it to the mixture. Describe what happened, and explain how that substance worked to combine the oil and water.

5. List the four classical divisions of chemistry. Briefly describe each one, and tell how it applies to your everyday life.

6. Do EACH of the following activities:

   a. Name two government agencies that are responsible for tracking the use of chemicals for commercial or industrial use. Pick one agency and briefly describe its responsibilities to the public and the environment.
   b. Define pollution. Explain the chemical effects of ozone, global warming, and acid rain. Pick a current environmental problem as an example. Briefly describe what people are doing to resolve this hazard and to increase understanding of the problem.
   c. Using reasons from chemistry, describe the effect on the environment of ONE of the following:
      1. The production of aluminum cans or plastic milk cartons
      2. Sulfur from burning coal
      3. Used motor oil
      4. Newspaper
   d. Briefly describe the purpose of phosphates in fertilizer and in laundry detergent. Explain how the use of phosphates in fertilizers affects the environment. Also, explain why phosphates have been removed from laundry detergents.

7. Do ONE of the following activities:

   a. Visit a laboratory and talk to a practicing chemist. Ask what the chemist does, and what training and education are needed to work as a chemist.
   b. Using resources found at the library and in periodicals, books, and the Internet (with your parent's permission), learn about two different kinds of work done by chemists, chemical engineers, chemical technicians, or industrial chemists. For each of the four jobs, find out the education and training requirements.
   c. Visit an industrial plant that makes chemical products or uses chemical processes and describe the processes used. What, if any, pollutants are produced and how they are handled.
   d. Visit a county farm agency or similar governmental agency and learn how chemistry is used to meet the needs of agriculture in your county.

Boy Scout Merit Badge Requirements

Citizenship in the Community

1. Discuss with your counselor what citizenship in the community means and what it takes to be a good citizen in your community. Discuss the rights, duties, and obligations of citizenship, and explain how you can demonstrate good citizenship in your community, Scouting unit, place of worship or school.

2. Do the following:

    a. On a map of your community, locate and point out the following:
        1. Chief government buildings such as your city hall, county courthouse, and public works/services facility
        2. Fire station, police station, and hospital nearest your home
        3. Historical or other interesting points

    b. Chart the organization of your local or state government. Show the top offices and tell whether they are elected or appointed.

3. Do the following:

    a. Attend a city or town council or school board meeting, or a municipal; county, or state court session.

    b. Choose one of the issues discussed at the meeting where a difference of opinions was expressed, and explain to your counselor why you agree with one opinion more than you do another one.

4. Choose an issue that is important to the citizens of your community; then do the following:

    a. Find out which branch of local government is responsible for this issue.

    b. With your counselor's and a parent's approval, interview one person from the branch of government you identified in requirement 4a. Ask what is being done about this issue and how young people can help.

    c. Share what you have learned with your counselor.

5. With the approval of your counselor and a parent, watch a movie that shows how the actions of one individual or group of individuals can have a positive effect on a community. Discuss with your counselor what you learned from the movie about what it means to be a valuable and concerned member of the community.

6. List some of the services (such as the library, recreation center, public transportation, and public safety) your community provides that are funded by taxpayers. Tell your counselor why these services are important to your community.

7. Do the following:

   a. Choose a charitable organization outside of Scouting that interests you and brings people in your community together to work for the good of your community.
   b. Using a variety of resources (including newspapers, fliers and other literature, the Internet, volunteers, and employees of the organization), find out more about this organization.
   c. With your counselor's and your parent's approval, contact the organization and find out what young people can do to help. While working on this merit badge, volunteer at least eight hours of your time for the organization. After your volunteer experience is over, discuss what you have learned with your counselor.

8. Develop a public presentation (such as a video, slide show, speech, digital presentation, or photo exhibit) about important and unique aspects of your community. Include information about the history, cultures, and ethnic groups of your community; its best features and popular places where people gather; and the challenges it faces. Stage your presentation in front of your merit badge counselor or a group, such as your patrol or a class at school.

Boy Scout Merit Badge Requirements

Citizenship in the Nation

1. Explain what citizenship in the nation means and what it takes to be a good citizen of this country. Discuss the rights, duties, and obligations of a responsible and active American citizen.

2. Do TWO of the following:

    a. Visit a place that is listed as a National Historic Landmark or that is on the National Register of Historic Places. Tell your counselor what you learned about the landmark or site and what you found interesting about it.
    b. Tour your state capitol building or the U.S. Capitol. Tell your counselor what you learned about the capitol, its function, and the history.
    c. Tour a federal facility. Explain to your counselor what you saw there and what you learned about its function in the local community and how it serves this nation.
    d. Choose a national monument that interests you. Using books, brochures, the Internet (with your parent's permission), and other resources, find out more about the monument. Tell your counselor what you learned, and explain why the monument is important to this country's citizens.

3. Watch the national evening news five days in a row OR read the front page of a major daily newspaper five days in a row. Discuss the national issues you learned about with your counselor. Choose one of the issues and explain how it affects you and your family.

4. Discuss each of the following documents with your counselor. Tell your counselor how you feel life in the United States might be different without each one.

    a. Declaration of Independence
    b. Preamble to the Constitution
    c. The Constitution
    d. Bill of Rights
    e. Amendments to the Constitution

5. List the six functions of government as noted in the preamble to the Constitution. Discuss with your counselor how these functions affect your family and local community.

6. With your counselor's approval, choose a speech of national historical importance. Find out about the author, and tell your counselor about the person who gave the speech.

Explain the importance of the speech at the time it was given, and tell how it applies to American citizens today. Choose a sentence or two from the speech that has significant meaning to you, and tell your counselor why.

7. Name the three branches of our federal government and explain to your counselor their functions. Explain how citizens are involved in each branch. For each branch of government, explain the importance of the system of checks and balances.

8. Name your two senators and the member of Congress from your congressional district. Write a letter about a national issue and send it to one of these elected officials, sharing your view with him or her. Show your letter and any response you receive to your counselor.

Citizenship in the Nation

This workbook can help you but you still need to read the merit badge pamphlet (book). No one can add or subtract from the Boy
Scout Requirements #33215. Merit Badge Workbooks and much more are below: Online Resources
Workbook developer: craig@craiglincoln.com. Requirements revised: 2005, Workbook updated: November 2008.
Scout's Name: _____ Unit: _____
Counselor's Name: _____ Counselor's Ph #: _____

1. Explain what citizenship in the nation means

_____
_____
_____
_____
_____

and what it takes to be a good citizen of this country.

_____
_____
_____
_____
_____

Discuss the rights,

_____
_____
_____
_____
_____
_____
_____
_____
_____
_____

duties,

_____
_____
_____
_____
_____
_____
_____
_____

and obligations of a responsible and active American citizen.

_____
_____
_____
_____
_____

_____

2. Do TWO of the following:
(a) Visit a place that is listed as a National Historic Landmark or that is on the National Register of Historic Places. Tell your counselor what you learned about the landmark or site and what you found interesting about it.

_____

_____

(b) Tour your state capitol building or the U.S. Capitol. Tell your counselor what you learned about the capitol, its function, and the history.

_____

(c) Tour a federal facility. Explain to your counselor what you saw there and what you learned about its function in the local community and how it serves this nation.

_____

_____

(d) Choose a national monument that interests you.

_____

Using books, brochures, the Internet (with your parent's permission), and other resources, find out more about the monument. Tell your counselor what you learned,

_____

and explain why the monument is important to this country's citizens.

_____

3. Watch the national evening news five days in a row OR read the front page of a major daily newspaper five days in a row. Discuss the national issues you learned about with your counselor.

_____

_____

_____
_____
_____
_____
_____
_____
_____
_____

Choose one of the issues

_____
___

and explain how it affects you and your family.

_____
_____
_____
_____
_____
_____
_____
_____
_____
_____
_____

4. Discuss each of the following documents with your counselor. Tell your counselor how you feel life in the United
States might be different without each one.
(a) Declaration of Independence

_____
_____
_____
_____
_____
_____
_____
_____
_____

(b) Preamble to the Constitution

_____
_____
_____
_____
_____
_____
_____
_____
_____

(c) The Constitution

_____
_____
_____
_____

_____
_____
_____
_____
_____
_____
_____
_____
_____
_____

(d) Bill of Rights

Citizenship in the Nation p. 4 Merit Badge Workbook Scout's Name: _____

1_____
_____

2_____
_____

3_____
_____

4_____
_____

5_____
_____

6_____
_____

7_____
_____

8_____
_____

9_____
_____

10_____
_____

(e) Amendments to the Constitution

_____
_____
_____
_____
_____
_____
_____
_____
_____

5. List the six functions of government as noted in the preamble to the Constitution. Function Discuss with your counselor how these functions affect your family and local community.

_____
_____
_____
_____
_____
_____

_____
_____
_____
_____
_____
_____
_____
_____
_____
_____
_____
_____
_____
_____
_____
_____
_____
_____
_____

6. With your counselor's approval, choose a speech of national historical importance.

_____

_____
_____

Find out about the author, and tell your counselor about the person who gave the speech. _____

_____
_____
_____
_____
_____
_____
_____
_____

Explain the importance of the speech at the time it was given,

_____
_____
_____
_____
_____
_____
_____
_____

and tell how it applies to American citizens today.

_____
_____
_____
_____
_____
_____
_____
_____

_____

Choose a sentence or two from the speech that has significant meaning to you,

_____

_____

_____

_____

_____

_____

_____

_____

_____

and tell your counselor why.

_____

_____

_____

_____

_____

_____

_____

_____

_____

_____

_____

7. Name the three branches of our federal government and explain to your counselor their functions. Explain how citizens are involved in each branch. For each branch of government, explain the importance of the system of checks and balances.

Branch: _____

Function:

_____

_____

_____

_____

_____

_____

_____

Citizen Involvement:

_____

_____

_____

_____
_____
_____
_____

Importance of Checks & Balances:

_____
_____
_____
_____
_____
_____
_____

Branch: _____

Function:

_____
_____
_____
_____
_____
_____
_____
_____

Citizen Involvement:

_____
_____
_____
_____
_____
_____
_____
_____

Importance of Checks & Balances:

_____
_____
_____
_____
_____
_____
_____

Branch: _____

Function:

_____
_____
_____
_____
_____
_____
_____
_____

Citizen Involvement:

_____
_____
_____
_____
_____
_____
_____

Importance of Checks & Balances:

_____
_____
_____
_____
_____
_____
_____

8. Name your two senators

_____
__

_____
_____

and the member of Congress from your congressional district.

_____
_____
_____

Write a letter about a national issue and send it to one of these elected officials, sharing your view with him or her.
Show your letter and any response you receive to your counselor.

_____
_____
_____
_____

Online Resources *(Use any Internet resource with caution and only with your parent's or guardian's permission.)*
Boy Scouts of America: ►scouting.org ►Guide to Safe Scouting ►Age-Appropriate Guidelines ►Safe Swim Defense
►Scout ►Tenderfoot ►Second Class ►First Class 🎬 Rank Videos ►Safety Afloat
Boy Scout Merit Badge Workbooks: usscouts.org -or- meritbadge.org **Merit Badge Books:**
www.scoutstuff.org
Requirement Resources
1: Citizenship: http://en.wikipedia.org/wiki/Citizenship
Rights: http://en.wikipedia.org/wiki/United_States_nationality_law#Rights_of_citizens
Duties: http://en.wikipedia.org/wiki/Duty Jury Duty: http://en.wikipedia.org/wiki/Jury_duty
Obligations (Responsibilities): http://en.wikipedia.org/wiki/United_States_nationality_law#Responsibilities_of_citizens
2a: Find National Historic Landmarks: http://tps.cr.nps.gov/nhl/default.cfm
Find local places listed in the National Register of Historic Places: http://www.nr.nps.gov/
2c: Your local post office is a federal facility. To find their address and phone number to arrange a tour: http://www.usps.com/locator/welcome.htm?from=home&page=0060locatepo

2d: List of National Monuments: http://en.wikipedia.org/wiki/List_of_National_Monuments_of_the_United_States
3: Links to major daily newspaper websites: http://www.newspaperlinks.com/voyager.cfm
4a: Declaration of Independence: http://en.wikipedia.org/wiki/United_States_Declaration_of_Independence
4b: Preamble to the Constitution: http://en.wikipedia.org/wiki/Preamble_to_the_United_States_Constitution
4c: The Constitution: http://en.wikipedia.org/wiki/United_States_Constitution
The U. S. Constitution Online: http://www.usconstitution.net
4d: Bill of Rights: http://en.wikipedia.org/wiki/United_States_Bill_of_Rights
4e: Amendments to the Constitution:
http://en.wikipedia.org/wiki/List_of_amendments_to_the_United_States_Constitution
5: Six functions of government from the first six articles: http://en.wikipedia.org/wiki/United_States_Constitution
6: Famous speeches: http://en.wikipedia.org/wiki/Famous_speeches
http://en.wikipedia.org/wiki/Gettysburg_Address http://en.wikipedia.org/wiki/I_have_a_dream
Presidential Speeches: http://comm.tamu.edu/pres/speech.html
7: Branches of Government: http://en.wikipedia.org/wiki/Branches_of_government#United_States:_three_branches
8: Citizenship in the Nation MB Pamphlet, page 41: *"You can write a letter online or send a letter by mail."*
Write a letter online to your Senator or Congressman: http://www.usa.gov/Contact/Elected.shtml
U.S. House of Representatives: http://www.house.gov U.S. Senate: http://www.senate.gov

General Resources

American Civil Liberties Union: http://www.aclu.org Democratic National Committee: http://www.democrats.org
FirstGov: http://www.firstgov.gov GovSpot: http://www.govspot.com
League of Women Voters: http://www.lwv.org National Constitution Center: http://www.constitutioncenter.org
National Park Service: http://www.nps.gov Republican National Committee: http://www.rnc.org
Thomas: http://thomas.loc.gov U.S. Census Bureau: http://www.census.gov
Citizenship in the Nation p. 8 Merit Badge Workbook Scout's Name: _____
U.S. Government Printing Office: http://www.gpoaccess.gov U.S. Supreme Court: http://www.supremecourtus.gov
The White House: http://www.whitehouse.gov

Boy Scout Merit Badge Requirements

Citizenship in the World

1. Explain what citizenship in the world means to you and what you think it takes to be a good world citizen.

2. Explain how one becomes a citizen in the United States, and explain the rights, duties, and obligations of U.S. citizenship. Discuss the similarities and differences between the rights, duties, and obligations of U.S. citizens and the citizens of two other countries.

3. Do the following:

   a. Pick a current world event. In relation to this current event, discuss with your counselor how a country's national interest and its relationship with other countries might affect areas such as its security, its economy, its values, and the health of its citizens.
   b. Select a foreign country and discuss with your counselor how its geography, natural resources, and climate influence its economy and its global partnerships with other countries.

4. Do TWO of the following:

   a. Explain international law and how it differs from national law. Explain the role of international law and how international law can be used as a tool for conflict resolution.
   b. Using resources such as major daily newspapers, the Internet (with your parent's permission), and news magazines, observe a current issue that involves international trade, foreign exchange, balance of payments, tariffs, and free trade. Explain what you have learned. Include in your discussion an explanation of why countries must cooperate in order for world trade and global competition to thrive.
   c. Select TWO of the following organizations and describe their role in the world.
      1. The United Nations
      2. The World Court
      3. World Organization of the Scout Movement
      4. The World Health Organization
      5. Amnesty International
      6. The International Committee of the Red Cross
      7. CARE

5. Do the following:

   a. Discuss the differences between constitutional and nonconstitutional governments.

b. Name at least five different types of governments currently in power in the world.
c. Show on a world map countries that use each of these five different forms of government.

6. Do the following:

a. Explain how a government is represented abroad and how the United States government is accredited to international organizations.
b. Describe the roles of the following in the conduct of foreign relations.
    1. Ambassador
    2. Consul
    3. Bureau of International Information Programs
    4. Agency for International Development
    5. United States and Foreign Commercial Service
c. Explain the purpose of a passport and visa for international travel.

7. Do TWO of the following and share with your counselor what you have learned:

a. Visit the Web site (With your parent/guardian's permission) of the U.S. State Department. Learn more about an issue you find interesting that is discussed on this Web site.
b. Visit the Web site (With your parent/guardian's permission) of an international news organization or foreign government, OR examine a foreign newspaper available at your local library, bookstore, or newsstand. Find a news story about a human right realized in the United States that is not recognized in another country.
c. Visit with a student or Scout from another country and discuss the typical values, holidays, ethnic foods, and traditions practiced or enjoyed there.
d. Attend a world Scout jamboree.
e. Participate in or attend an international event in your area, such as an ethnic festival, concert, or play.

Boy Scout Merit Badge Requirements

Communications

1. Do ONE of the following:

   a. For one day, keep a log in which you describe your communication activities. Keep track of the time and different ways you spend communicating, such as talking person-to-person, listening to your teachers or the radio, watching television, reading books, and other print media, and communicating online. Discuss with your counselor what your log reveals about the importance of communication in your life. Think of ways to improve your communications skills.
   b. For three days, keep a journal of your listening experiences. Identify one example of each of the following, and discuss with your counselor when you have listened to:
      1. Obtain information
      2. A persuasive argument
      3. Appreciate or enjoy something
      4. Understand someone's feelings
   c. In a small-group setting, meet with other scouts or with friends. Have them share personal stories about significant events in their lives that affected them in some way. Take note of how each scout participates in the group discussion and how effective each one is in telling his story. Report what you have learned to your counselor about the differences you observed in effective communication.
   d. List as many ways as you can think of to communicate with others (face-to-face, by telephone, letter, e-mail, fax). For each type of communication discuss with your counselor an instance when that method might not be appropriate or effective.

2. Do ONE of the following:

   a. Think of a creative way to describe yourself, using, for example, a collage, short story or autobiography, drawing or series of photographs, or a song or skit. Using the aid you created, make a presentation to your counselor about yourself.
   b. Choose a concept, product, or service in which you have great confidence. Build a sales plan based on its good points. Try to persuade the counselor to agree with, use, or buy your concept, product or service. After your sales talk, discuss with your counselor how persuasive you were.

3. Write a five-minute speech. Give it at a meeting of a group.

4. Interview someone you know fairly well, like, or respect because of his or her position, talent, career or life experiences. Listen actively to learn as much as you can about the

person. Then prepare and deliver to your counselor an introduction of the person as though this person were to be a guest speaker, and include reasons why the audience would want to hear this person speak. Show how you would call to invite this person to speak.

5. Attend a public meeting (city council, school board, debate) approved by your counselor where several points of view are given on a single issue. Practice active listening skills and take careful notes of each point of view. Present an objective report that includes all points of view that were expressed, and share this with your counselor.

6. With your counselor's approval, develop a plan to teach a skill or inform someone about something. Prepare teaching aids for your plan. Carry out your plan. With your counselor, determine whether the person has learned what you intended.

7. Do ONE of the following:

   a. Write to the editor of a magazine or your local newspaper to express your opinion or share information on any subject you choose. Send your message by fax, email or regular mail.
   b. Create a Web page for your scout troop, school, or other organization. Include at least one article and one photograph or illustration, and one link to some other web page that would be helpful to someone who visits the web page you have created. It is not necessary to post your web page to the internet, but if you decide to do so, you must first share it with your parents and counselor and get their permission.
   c. Use desktop publishing to produce a newsletter, brochure, flier or other printed material for your scout troop, class at school, or other group. Include at least one article and one photograph or illustration.

8. Plan a troop court of honor or campfire program. Have the patrol leaders' council approve it, then write the script and prepare the program. Serve as master of ceremonies.

9. Learn about opportunities in the field of communication. Choose one career in which you are interested and discuss with your counselor the major responsibilities of that position and the qualifications, education, and preparation it requires.

Boy Scout Merit Badge Requirements

Computers

1. Discuss with your counselor the tips for online safety.

2. Explain how the invention of the computer has affected society, science, and technology. In your explanation, give a short history of the computer.

3. Do the following:

   a. Explain four different uses of computers.
   b. Describe three ways you and your family could use a personal computer other than for games and recreation.

4. Explain to your counselor the following:

   a. The major parts of a computer system
   b. How the types of files used to store text, sound, pictures, and video are stored in a computer's memory

5. Do the following:

   a. Explain what a program is and how it is developed.
   b. Give three examples of programming languages, and describe their uses.
   c. Name four software packages you or your family could use, and explain how you would use them.
   d. Discuss ways you can help protect a computer from viruses and how to keep secure information that has been saved on a computer.
   e. Describe how computers are linked to form the Internet and the World Wide Web.

6. Do THREE of the following:

   a. Use a database manager to create a troop roster that includes the name, rank, patrol, and telephone number of each Scout. Show your counselor that you can sort the register by each of the following categories: rank, patrol, and alphabetically by name.
   b. Use a spreadsheet program to develop a food budget for a patrol weekend campout.
   c. Use a word processor to write a letter to the parents of your troop's Scouts inviting them to a court of honor. Use the program's mail merge feature to make a personalized copy of the letter for each family.

d. Use a computer graphics program to design and draw a campsite plan for your troop, OR design a flyer for an upcoming troop event.
e. Using a software package of your choice, develop a short presentation about a topic that has been approved by your counselor. For your presentation create at least 10 slides.
f. Using an Internet search engine, find ideas about how to conduct a troop court of honor or campfire program. Print out a copy of the ideas from at least three different Web sites. Share what you found with your counselor, and explain how you used the search engine to find this information.
g. Using a digital camera, take a picture of a troop activity. Transfer the picture file to a computer and use photographic software to make it small enough to send easily as an e-mail attachment. Then, using a computer connected to the Internet (with your parent's permission), send an e-mail to someone you know. In your message, include the photograph as an attachment. Verify that the person received your e-mail and was able to view the attachment.
h. Describe two computer chip-based devices, and explain how they are "smarter" because of the chip and its program.

7. Do ONE of the following:

a. Visit a business or an industrial plant that uses computers. Observe what tasks the computers accomplish, and be prepared to discuss what you have learned.
b. Using a software package of your choice for computer aided design (CAD), create an engineering-style drawing of a simple object. Include the top, bottom, and at least one side view and the dimensions.
c. Use a general purpose programming language to write a simple program application of your choice, subject to approval by your counselor.
d. Design a Web page for your troop, patrol, school, or place of worship. You need not post the page to a Web site. However, if you decide to do so, you will first need to get your parent's permission and your counselor's approval, as well as permission from the host site.

8. For each of the following categories, discuss several related terms: input and output devices, storage media, memory, processors and coprocessors, modems or network cards, networks, World Wide Web and Internet, electronic mail, Wi-Fi.

9. Explain the following to your counselor:

a. Why it is not permissible to accept a free copy of a copyrighted computer game or program from a friend
b. The restrictions and limitations of downloading music from the Internet
c. Why copyright laws exist

10. Pick two career opportunities in the computer field that interest you. Find out what education, training, and experience those positions require. Report what you learn to your counselor.

Boy Scout Merit Badge Requirements

Crime Prevention

1. Discuss the role and value of laws in society with regard to crime and crime prevention. Include in your discussion the definitions of "crime" and "crime prevention."

2. Prepare a notebook of newspaper and other clippings that addresses crime and crime prevention efforts in your community.

3. Discuss the following with your counselor:

    a. The role of citizens, including youth, in crime prevention
    b. Gangs and their impact on the community
    c. When and how to report a crime

4. After doing EACH of the following, discuss with your counselor what you have learned.

    a. Inspect your neighborhood for opportunities that may lead to crime. Learn how to do a crime prevention survey.
    b. Using the checklist in this (the merit badge) pamphlet, conduct a security survey of your home and discuss the results with your family.

5. Teach your family or patrol members how to protect themselves from crime at home, at school, in your community, and while traveling.

6. Help raise awareness about one school safety issue facing students by doing ONE of the following:

    a. Create a poster for display on a school bulletin board.
    b. With permission from school officials, create a page long public service announcement that could be read over the public address system at school or posted on the school's Web site.
    c. Make a presentation to a group such as a Cub Scout den that addresses the issue.

7. Do ONE of the following:

    a. Assist in the planning and organization of a crime prevention program in your community such as Neighborhood Watch, Community Watch, or Crime Stoppers. Explain how this program can benefit your neighborhood.
    b. With your parent's and counselor's approval, visit a jail or detention facility or a criminal court hearing. Discuss your experience with your counselor.

8. Discuss the following with your counselor:

   a. How drug abuse awareness programs, such as "Drugs: A Deadly Game," help prevent crime.
   b. Why alcohol, tobacco, and marijuana are sometimes called "gateway drugs" and how "gateway drugs" can lead to the use of other drugs .
   c. Three resources in your city where a person with a drug problem or drug-related problem can go for help.
   d. How the illegal sale and use of drugs lead to other crimes
   e. How to recognize child abuse.
   f. The three R's of Youth Protection.

9. Discuss the following with your counselor:

   a. The role of a sheriff's or police department in crime prevention.
   b. The purpose and operation of agencies in your community that help law enforcement personnel prevent crime, and how those agencies function during emergency situations.
   c. Explain the role private security plays in crime prevention.
   d. Choose a career in the crime prevention or security industry that interests you. Describe the level of education required and responsibilities of a person in that position. Tell why this position interests you.

Boy Scout Merit Badge Requirements

Disabilities Awareness

1. Discuss with your counselor proper disability etiquette and person first language. Explain why these are important.

2. Visit an agency that works with people with physical, mental, emotional, or educational disabilities. Collect and read information about the agency's activities. Learn about opportunities its members have for training, employment, and education.

3. Do TWO of the following:
   A. Talk to a Scout who has a disability and learn about his experiences taking part in Scouting activities and earning different merit badges.
   B. Talk to an individual who has a disability and learn about this person's experiences and the activities in which this person likes to participate.
   C. Learn how people with disabilities take part in a particular adaptive sport or recreational activity. Discuss what you have learned with your counselor.
   D. Learn about independent living aids such as service animals, canes, and teletypewriters (TTYs). Discuss with your counselor how people use such aids.

4. Visit TWO of the following locations and take notes about the accessibility to people with disabilities. In your notes, give examples of five things that could be done to improve upon the site and five things about the site that make it friendly to people with disabilities. Discuss your observations with your counselor.
   A. Your school
   B. Your place of worship
   C. Your Scout camping site
   D. A public exhibit or attraction (such as a theater, museum, or park)

5. Explain what advocacy is. Do ONE of the following advocacy activities:
   A. Present a counselor approved disabilities awareness program to a Cub Scout pack or other group. During your presentation, explain and use person first language.

B. Find out about disability awareness education programs in your school or school system, or contact a disability advocacy agency. Volunteer with a program or agency for eight hours.
C. Using resources such as disability advocacy agencies, government agencies, the Internet (with your parent's permission), and news magazines, learn about myths and misconceptions that influence the general public's understanding of people with disabilities. List 10 myths and misconceptions about people with disabilities and learn the facts about each myth. Share your list with your counselor, then use it to make a presentation to a Cub Scout pack or other group.

6. Make a commitment to your merit badge counselor describing what you will do to show a positive attitude about people with disabilities and to encourage positive attitudes among others. Discuss how your awareness has changed as a result of what you have learned.

7. Name five professions that provide services to people with disabilities. Pick one that interests you and find out the education, training, and experience required for this profession. Discuss what you learn with your counselor, and tell why this profession interests you.

Boy Scout Merit Badge Requirements

Electronics

1. Describe the safety precautions you must exercise when using, building, altering, or repairing electronic devices.

2. Do the following:

   a. Draw a simple schematic diagram. It must show resistors, capacitors, and transistors or integrated circuits. Use the correct symbols. Label all parts.
   b. Tell the purpose of each part.

3. Do the following:

   a. Show the right way to solder and desolder.
   b. Show how to avoid heat damage to electronic components.
   c. Tell about the function of a printed circuit board. Tell what precautions should be observed when soldering printed circuit boards.

4. Discuss each of the following with your merit badge counselor, and then choose ONE of the following and build a circuit to show the techniques used:

   a. Tell how you can use electronics for a control purpose, and then build a control device circuit.
   b. Tell about the basic principles of digital techniques, and then build a digital circuit. Show how to change three decimal numbers into binary numbers, and three binary numbers into decimal numbers.
   c. Tell about three audio applications of electronics, and then build an audio circuit.

5. Show how to read the schematic diagram of the project you choose and, to the best of your ability, explain to your counselor how the circuit you built operates.

6. Do the following:

   a. Show how to solve a simple problem involving current, voltage, and resistance using Ohm's law.
   b. Tell about the need for and the use of test equipment in electronics. Name three types of test equipment. Tell how they operate.

7. Find out about three career opportunities in electronics that interest you. Discuss with and explain to your counselor what training and education are needed for each position.

Electronics Merit Badge Written Work Prerequisites Worksheet

September 2007

The merit badge class session will be devoted to completing Requirements 3.a. and 4. The scout will be building an electronic control project kit using proper soldering techniques, and then explaining how the circuit works to the satisfaction of the merit badge counselor. All scouts that do this will, as a minimum, get credit for a partial completion of the merit badge.

To equip the scout to explain how his project works, much of the class time will be devoted to theory and demonstrations that show how the basic electronic components in his control project operate.

Any scout, however, that wants to earn the Electronics Merit Badge on the day of the class session, must complete the requirements shown above in red **prior to attending the class**. To accomplish this, each scout is encouraged to complete the following worksheet. Using some other format will not guarantee that the work can be graded during the class session.

Scouts may work together to answer each worksheet part, but just copying someone else's work is not acceptable. The counselor or his assistant may quiz a scout to insure that the work he turns in is his own.

The answers to all worksheet questions can be found by studying the © 2004 Electronics Merit Badge book.

Electronics Merit Badge Worksheet

Requirements 1, 3.b and 3.c: Complete the following table:

Safety Precautions and Tips for Successful Electronic Equipment Building	
Precaution or Tip	**Reason**
Don't apply too much soldering iron heat to printed circuit boards traces.	
Don't eat while soldering and wash your hands after you are finished soldering.	
Were goggles when building electronic equipment.	
It is wise to touch a grounded piece of metal before touching electronic parts.	
Don't bend component leads too close to the component body.	
Thoroughly heat all items to be soldered together **before** applying any solder.	
Don't repeatedly bend a wire.	
Don't force a component wire lead into a hole that is much smaller than the diameter of the wire.	
Avoid inhaling solder fumes.	
Always "tin" your soldering iron tip.	
Be careful not to splash solder from your soldering iron or from the project you are building.	
Keep a soldering iron in its holder when you are not using it.	
Turn off a soldering iron when it is not immediately needed.	
Building projects on printed circuit boards is the modern preferred way to interconnect electronic components.	

Requirement 2.b: Complete the table shown below the schematic (see hints on the following page).

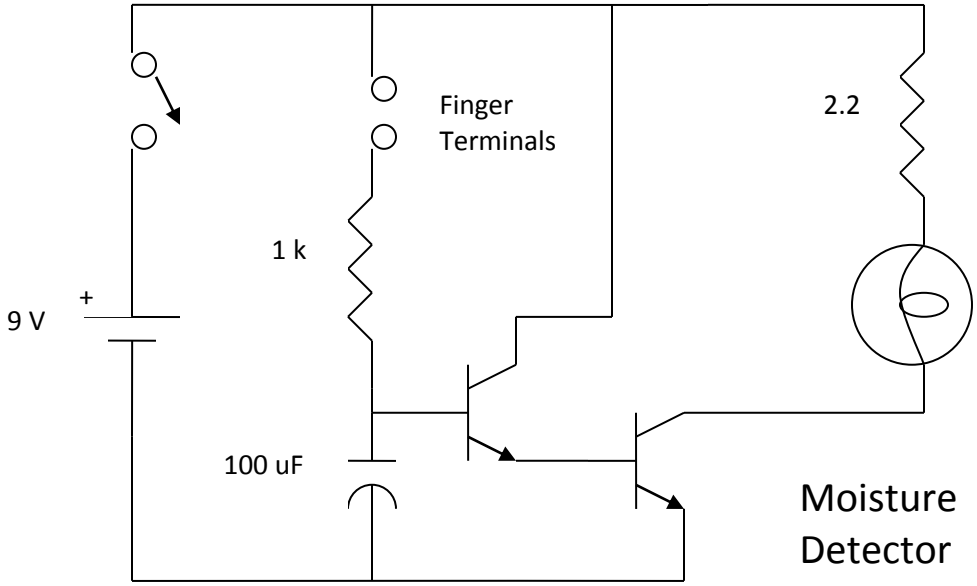

Identifying Electronic Components and Describing What They Do		
Symbol	**Name**	**What it Does (Function)**
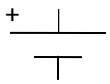		
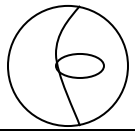	Lightbulb	Provides light and burns up energy.
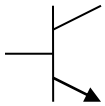		

Possible Names: Coil, Capacitor, Lightbulb, Single-Pole Single-Throw Switch, Transistor, Integrated Circuit, Battery, Diode, Electron Tube, OR Gate, Transformer

Possible Functions: Stores and Then Releases Energy, Burns-Up Energy, Amplifies (a small input current controls a large output current), Supplies Continuous DC Current, Turns Current On and Off, Protects Circuit from Too Much Current

The schematic diagram shown above describes how different electronic parts are connected together to make a moisture detector. When you put your fingertip across the finger terminals, the time it takes to turn on the light and the brightness of the light indicates how much moisture is in you fingertips. (An actual moisture detector built according to this schematic diagram will be demonstrated in class.)

Requirement 2.a: Redraw the Moisture Detector schematic and place the proper name by each part.

Moisture Detector

Requirement 5.a: Ohms Law in one of its three forms is V = IR (Voltage equals Current times Resistance). Complete the following table:

Ohm's Law Problems Table			
Voltage	**Current**	**Resistance**	**Formula Used**
	3 Amperes	6 Ohms	V = IR
1.5 Volts		3 Ohms	
6 Volts	1.5 Amperes		

Requirement 5.b.: Complete the following sentence:

Test equipment is needed when working with electronic circuits because…….....

Complete the following table:

Electronic Test Equipment	
Type of Electronic Test Equipment	**What it Measures or How it is Used**
Oscilloscope	
Multimeter	
Signal Generator	

Requirement 6: Complete the following table:

Careers in Electronics		
Career Opportunity	**Job Description**	**Training and Education Needed**
Electronics Equipment Operator		
Electronics Technician		
Electronics Engineer		

Boy Scout Merit Badge Requirements

Energy

1. Do the following:

   a. Find an article on the use or conservation of energy. Discuss with your counselor what in the article was interesting to you, the questions it raises, and what ideas it addresses that you do not understand.
   b. After you have completed requirements 2 through 8, revisit the article you found for requirement la. Explain to your counselor what you have learned in completing the requirements that helps you better understand the article.

2. Show you understand energy forms and conversions by doing the following:

   a. Explain how THREE of the following devices use energy, and explain their energy conversions: toaster, greenhouse, light bulb, bow drill, nuclear reactor, sweat lodge.
   b. Construct a system that makes at least two energy conversions and explain this to your counselor.

3. Show you understand energy efficiency by explaining to your counselor a common example of a situation where energy moves through a system to produce a useful result. Do the following:

   a. Identify the parts of the system that are affected by the energy movement.
   b. Name the system's primary source of energy.
   c. Identify the useful outcomes of the system.
   d. Identify the energy losses of the system.

4. Conduct an energy audit of your home. Keep a 14 day log that records what you and your family did to reduce energy use. Include the following in your report and, after the 14 day period, discuss what you have learned with your counselor.

   a. List the types of energy used in your home such as electricity, wood, oil, liquid petroleum, and natural gas, and tell how each is delivered and measured, and the current cost; OR record the transportation fuel used, miles driven, miles per gallon, and trips using your family car or another vehicle.
   b. Describe ways you and your family can use energy resources more wisely. In preparing your discussion, consider the energy required for the things you do and use on a daily basis (cooking, showering, using lights, driving, watching TV, using the computer). Explain how you can change your energy use through reuse and recycling.

5. In a notebook, identify and describe five examples of energy waste in your school or community. Suggest in each case possible ways to reduce this waste. Describe the idea of trade offs in energy use. In your response, do the following:

    a. Explain how the changes you suggest would lower costs, reduce pollution, or otherwise improve your community.
    b. Explain what changes to routines, habits, or convenience are necessary to reduce energy waste. Tell why people might resist the changes you suggest.

6. Prepare pie charts showing the following information, and explain to your counselor the important ideas each chart reveals. Tell where you got your information. Explain how cost affects the use of a nonrenewable energy resource and makes alternatives practical.

    a. The energy resources that supply the United States with most of its energy
    b. The share of energy resources used by the United States that comes from other countries
    c. The proportion of energy resources used by homes, businesses, industry, and transportation
    d. The fuels used to generate America's electricity
    e. The world's known and estimated primary energy resource reserves

7. Tell what is being done to make FIVE of the following energy systems produce more usable energy. In your explanation, describe the technology, cost, environmental impacts, and safety concerns.

    1. Biomass digesters or waste to energy plants
    2. Cogeneration plants
    3. Fossil fuel power plants
    4. Fuel cells
    5. Geothermal power plants
    6. Nuclear power plants
    7. Solar power systems
    8. Tidal energy, wave energy, or ocean thermal energy conversion devices
    9. Wind turbines

8. Find out what opportunities are available for a career in energy. Choose one position that interests you and describe the education and training required.

Boy Scout Merit Badge Requirements

Engineering

1. Select a manufactured item in your home (such as a toy or an appliance) and, under adult supervision and with the approval of your counselor, investigate how and why it works as it does. Find out what sort of engineering activities were needed to create it. Discuss with your counselor what you learned and how you got the information.

2. Select an engineering achievement that has had a major impact on society. Using resources such as the Internet (with your parent's permission), books, and magazines, find out about the engineers who made this engineering feat possible, the special obstacles they had to overcome, and how this achievement has influenced the world today. Tell your counselor what you learned.

3. Explain the work of six types of engineers. Pick two of the six and explain how their work is related.

4. Visit with an engineer (who may be your counselor or parent) and do the following:

   a. Discuss the work this engineer does and the tools the engineer uses.
   b. Discuss with the engineer a current project and the engineer's particular role in it.
   c. Find out how the engineer's work is done and how results are achieved.
   d. Ask to see the reports that the engineer writes concerning the project.
   e. Discuss with your counselor what you learned about engineering from this visit.

5. Do ONE of the following:

   a. Use the systems engineering approach to make step-by-step plans for your next campout. List alternative ideas for such items as program schedule, campsites, transportation, and costs. Tell why you made the choices you did and what improvements were made.
   b. Make an original design for a piece of patrol equipment. Use the systems engineering approach to help you decide how it should work and look. Draw plans for it. Show the plans to your counselor, explain why you designed it the way you did, and explain how you would make it.

6. Do TWO of the following:

   a. *Transforming motion.* Using common material or a construction set, make a simple model that will demonstrate motion. Explain how the model uses basic mechanical concepts like levers and inclined planes to demonstrate motion. Describe an example where this mechanism is used in a real product.

b. *Using electricity.* Make a list of 10 electrical appliances in your home. Find out approximately how much electricity each uses in one month. Learn how to find out the amount and cost of electricity used in your home during periods of light and heavy use. List five ways to conserve electricity.

c. *Understanding electronics.* Using an electronic device such as a mobile telephone or portable digital media player, find out how sound travels from one location to another. Explain how the device was designed for ease of use, function, and durability.

d. Using materials. *Do experiments to show the differences in strength and heat conductivity in wood, metal, and plastic. Discuss with your counselor what you have learned.*

e. *Converting energy.* Do an experiment to show how mechanical, heat, chemical, solar, and/or electrical energy may be converted from one or more types of energy to another. Explain your results. Describe to your counselor what energy is and how energy is converted and used in your surroundings.

f. *Moving people.* Find out the different ways people in your community get to work. Make a study of traffic flow (number of vehicles and relative speed) in both heavy and light traffic periods. Discuss with your counselor what might be improved to make it easier for people in your community to get where they need to go.

g. *Building an engineering project.* Enter a project in a science or engineering fair or similar competition. (This requirement may be met by participation on an engineering competition project team.) Discuss with your counselor what your project demonstrates, the kinds of questions visitors to the fair asked you about it, and how well were you able to answer their questions.

7. Explain what it means to be a registered Professional Engineer (PE). Name the types of engineering work for which registration is most important?

8. Study the **Engineer's Code of Ethics**. Explain how it is like the Scout Oath and Scout Law.

9. Find out about three career opportunities in engineering. Pick one and research the education, training, and experience required for this profession. Discuss this with your counselor, and explain why this profession might interest you.

Boy Scout Merit Badge Requirements

Environmental Science

1. Make a timeline of the history of environmental science in America. Identify the contribution made by the Boy Scouts of America to environmental science. Include dates, names of people or organizations, and important events.

2. Define the following terms: population, community, ecosystem, biosphere, symbiosis, niche, habitat, conservation, threatened species, endangered species, extinction, pollution prevention, brownfield, ozone, watershed, airshed, nonpoint source, hybrid vehicle, fuel cell.

3. Do ONE activity in EACH of the following categories (using the activities in this *{the merit badge}* pamphlet as the basis for planning and carrying out your projects): (Note: bring in your results for discussion)
   A. *Ecology*
      1. Conduct an experiment to find out how living things respond to changes in their environments. Discuss your observations with your counselor.
      2. Conduct an experiment illustrating the greenhouse effect. Keep a journal of your data and observations. Discuss your conclusions with your counselor.
      3. Discuss what is an ecosystem. Tell how it is maintained in nature and how it survives.
   B. *Air Pollution*
      1. Perform an experiment to test for particulates that contribute to air pollution. Discuss your findings with your counselor.
      2. Record the trips taken, mileage, and fuel consumption of a family car for seven days, and calculate how many miles per gallon the car gets. Determine whether any trips could have been combined ("chained") rather than taken out and back. Using the idea of trip chaining, determine how many miles and gallons of gas could have been saved in those seven days.
      3. Explain what is acid rain. In your explanation, tell how it affects plants and the environment and the steps society can take to help reduce its effects.
   C. *Water Pollution*
      1. Conduct an experiment to show how living things react to thermal pollution. Discuss your observations with your counselor.

2. Conduct an experiment to identify the methods that could be used to mediate (reduce) the effects of an oil spill on waterfowl. Discuss your results with your counselor.
3. Describe the impact of a waterborne pollutant on an aquatic community. Write a 100-word report on how that pollutant affected aquatic fife, what the effect was, and whether the effect is linked to biomagnification.

D. *Land Pollution*

1. Conduct an experiment to illustrate soil erosion by water. Take photographs or make a drawing of the soil before and after your experiment, and make a poster showing your results. Present your poster to your patrol or troop.
   (2) Perform an experiment to determine the effect of an oil spill on land. Discuss your conclusions with your counselor.
2. Perform an experiment to determine the effect of an oil spill on land. Discuss your conclusions with your counselor.
3. Photograph an area affected by erosion. Share your photographs with your counselor and discuss why the area has eroded and what might be done to help alleviate the erosion.

E. *Endangered Species*

1. Do research on one endangered species found in your state. Find out what its natural habitat is, why it is endangered, what is being done to preserve it, and how many individual organisms are left in the wild. Prepare a 100-word report about the organism, including a drawing. Present your report to your patrol or troop.
2. Do research on one species that was endangered or threatened but which has now recovered. Find out how the organism recovered, and what its new status is. Write a 100-word report on the species and discuss it with your counselor.
3. With your parent's and counselor's approval, work with a natural resource professional to identify two projects that have been approved to improve the habitat for a threatened or endangered species in your area. Visit the site of one of these projects and report on what you saw.

F. *Pollution Prevention, Resource Recovery, and Conservation*

1. Look around your home and determine 10 ways your family can help reduce pollution. Practice at least two of these methods for seven days and discuss with your counselor what you have learned.
2. Determine 10 ways to conserve resources or use resources more efficiently in your home, at school, or at camp. Practice at least two of these methods for seven days and discuss with your counselor what you have learned.
3. Perform an experiment on packaging materials to find out which ones are biodegradable. Discuss your conclusions with your counselor.

4. Choose two outdoor study areas that are very different from one another (e.g., hilltop vs. bottom of a hill; field vs. forest; swamp vs. dry land). For BOTH study areas, do ONE of the following:
    A. Mark off a plot of 4 square yards in each study area, and count the number of species found there. Estimate how much space is occupied by each plant species and the type and number of nonplant species you find. Write a report that adequately discusses the biodiversity and population density of these study areas. Discuss your report with your counselor.
    B. Make at least three visits to each of the two study areas (for a total of six visits), staying for at least 20 minutes each time, to observe the living and nonliving parts of the ecosystem. Space each visit far enough apart that there are readily apparent differences in the observations. Keep a journal that includes the differences you observe. Then, write a short report that adequately addresses your observations, including how the differences of the study areas might relate to the differences noted, and discuss this with your counselor.

5. Using the construction project provided or a plan you create on your own, identify the items that would need to be included in an environmental impact statement for the project planned.

6. Find out about three career opportunities in environmental science. Pick one and find out the education, training, and experience required for this profession. Discuss this with your counselor, and explain why this profession might interest you.

Boy Scout Merit Badge Requirements

Fingerprinting

1. Give a short history of fingerprinting. Tell the difference between civil and criminal identification.

2. Explain the difference between the automated fingerprint identification systems (AFIS) now used by some law enforcement agencies and the biometric fingerprint systems used to control access to places like buildings, airports, and computer rooms.

3. Do the following:

    a. Name the surfaces of the body where friction or papillary ridges are found.
    b. Name the two basic principles supporting the science of fingerprints and give a brief explanation of each principle.
    c. Explain what it takes to positively identify a person using fingerprints.

4. Take a clear set of prints using ONE of the following methods:

    a. Make both rolled and plain impressions. Make these on an 8-by-8-inch fingerprint identification card available from your local police department or counselor.
    b. Using clear adhesive tape, a pencil, and plain paper, record your own fingerprints or those of another person.

5. Show your merit badge counselor you can identify the three basic types of fingerprint patterns and their subcategories. Using your own hand, identify the types of patterns you see.

Boy Scout Merit Badge Requirements

Fire Safety

1. Do the following:

   a. Demonstrate the technique of stop, drop, roll, and cool. Explain how burn injuries can be prevented.
   b. List the most frequent causes of burn injuries.

2. Explain the chemistry and physics of fire. Name the parts of the fire tetrahedron. Explain why vapors are important to the burning process. Name the products of combustion. Give an example of how fire grows and what happens.

3. Name the most frequent causes of fire in the home and give examples of ways it can be prevented.

4. Do the following:

   a. Explain the role of human behavior in the arson problem in this country
   b. List the actions that cause seasonal fires and explain how these fires can be prevented.

5. List common circumstances that cause holiday-related fires and explain how these fires can be prevented.

6. Conduct a home safety survey with the help of an adult. Then do the following:

   a. Draw a home fire-escape plan, create a home fire-drill schedule, and conduct a home fire drill.
   b. Test a smoke alarm and demonstrate regular maintenance of a smoke alarm.
   c. Explain what to do when you smell gas and when you smell smoke.
   d. Explain how you would report a fire alarm.
   e. Explain what fire safety equipment can be found in public buildings.
   f. Explain who should use fire extinguishers and when these devices can be used.
   g. Explain how to extinguish a grease pan fire.
   h. Explain what fire safety precautions you should take when you are in a public building.

7. Do the following:

   a. Demonstrate lighting a match safely.
   b. Demonstrate the safe way to start a charcoal fire.
   c. Demonstrate the safe way to melt wax.

8. Explain the difference between combustible and noncombustible liquids and between combustible and noncombustible fabrics.

9. Do the following:

   a. Demonstrate the safe way to fuel a lawnmower.
   b. Demonstrate the safety factors, such as proper ventilation, for auxiliary heating devices and the proper way to fuel those devices.

10. Do the following:

    a. Explain the cost of outdoor and wildland fires and how to prevent them.
    b. Demonstrate setting up and putting out a cooking fire.
    c. Demonstrate using a camp stove and lantern.
    d. Explain how to set up a campsite safe from fire.

11. Visit a fire station. Identify the types of fire trucks. Find out about the fire prevention activities in your community.

12. Choose a fire safety-related career that interests you and describe the level of education required and responsibilities of a person in that position. Tell why this position interests you.

Boy Scout Merit Badge Requirements

First Aid

1. Satisfy your counselor that you have current knowledge of all first aid requirements for Tenderfoot Rank, Second Class Rank, and First Class Rank.

2. Do the following:

   a. Explain how you would obtain emergency medical assistance from your home, on a wilderness camping trip, and during an activity on open water.
   b. Explain the term *triage*.
   c. Explain the standard precautions as applied to blood borne pathogens.
   d. Prepare a first aid kit for your home. Display and discuss its contents with your counselor.

3. Do the following:

   a. Explain what action you should take for someone who shows signals of shock, for someone who shows signals of a heart attack, and for someone who shows signals of stroke.
   b. Identify the conditions that must exist before performing CPR on a person. Then demonstrate proper technique in performing CPR using a training device approved by your counselor.
   c. Explain the use of an automated external defibrillator (AED).
   d. Show the steps that need to be taken for someone suffering from a severe cut on the leg and on the wrist. Tell the dangers in the use of a tourniquet and the conditions under which its use is justified.
   e. Explain when a bee sting could be life threatening and what action should be taken for prevention and for first aid.
   f. Explain the symptoms of heatstroke and what action needs to be taken for first aid and for prevention.

4. Do the following:

   a. Describe the signals of a broken bone. Show first aid procedures for handling fractures (broken bones), including open (compound) fractures of the forearm, wrist, upper leg, and lower leg using improvised materials.
   b. Describe the symptoms and possible complications and demonstrate proper procedures for treating suspected injuries to the head, neck, and back. Explain what measures should be taken to reduce the possibility of further complicating these injuries.

5. Describe the symptoms, proper first aid procedures, and possible prevention measures for the following conditions:

    a. Hypothermia
    b. Convulsions / seizures
    c. Frostbite
    d. Dehydration
    e. Bruises, strains, sprains
    f. Burns
    g. Abdominal pain
    h. Broken, chipped, or loosened tooth
    i. Knocked out tooth
    j. Muscle cramps

6. Do TWO of the following:

    a. If a sick or injured person must be moved, tell how you would determine the best method. Demonstrate this method.
    b. With helpers under your supervision, improvise a stretcher and move a presumably unconscious person.
    c. With your counselor's approval, arrange a visit with your patrol or troop to an emergency medical facility or through an American Red Cross chapter for a demonstration of how an AED is used.

7. Teach another Scout a first-aid skill selected by your counselor.

Boy Scout Merit Badge Requirements

Journalism

1. Explain what freedom of the press is and how the First Amendment guarantees that you can voice your opinion. In your discussion, tell how to distinguish between fact and opinion, and explain the terms libel, slander, defamation, fair comment and criticism, public figure, privacy, and malice. Discuss how these matters relate to ethics in journalism.

2. Do either A OR B:

a. Newspaper and magazine journalism

1. All on the same day, read a local newspaper, a national newspaper, a newsmagazine, and (with your parent's permission) an online news source. From each source, clip, read, and compare a story about the same event. Tell your counselor how long each story is and how fair and accurate the stories are in presenting different points of view. Tell how each source handled the story differently, depending on its purpose or audience

2. Visit a newspaper or magazine office. Ask for a tour of the various divisions, (editorial, business, and printing). During your tour, talk to an executive from the business side about management's relations with reporters, editors, and photographers and what makes a "good" newspaper or magazine.

b. Radio and television journalism

1. All on the same day, watch a local and national network newscast, listen to a radio newscast, and (with your parent's permission) view a national broadcast news source online. List the different news items and features presented, the different elements used, and the time in minutes and seconds and the online space devoted to each story. Compare the story lists, and discuss whether the stories are fair and accurate. Explain why different news outlets treated the stories differently and/or presented a different point of view.

2. Visit a radio or television station. Ask for a tour of the various departments, concentrating on those related to news broadcasts during your tour, talk to the station manager or other station management executive about station operations, particularly how management and the news staff work together, and what makes a "good" station. If possible, go with a reporter to cover a news event.

3. Discuss the differences between a hard news story and a feature story. Explain what is the "five W's and H." Then do ONE of the following:

a. Choose a current or an unusual event of interest to you, and write either a hard news article OR a feature article about the event. Gear the article for print OR audio OR video journalism. Share your article with your counselor.
b. With your parent's permission and counselor's approval, interview someone in your community who is influential because of his or her leadership, talent, career, or life experiences. Then present to your counselor either a written or oral report telling what you learned about this person.
c. With your parent's permission and counselor's approval, read an autobiography written by a journalist you want to learn more about. Write an article that tells what you learned about this person and the contributions this person has made to the field of journalism.
d. Attend a Scouting event and write a 200-word article (feature or hard news) about the event. Use either the inverted pyramid style or the chronological style. Review the article with your counselor, then submit it to your community newspaper or BSA local council or district newsletter for consideration.

4. Attend a public event and do ONE of the following:

a. Write two newspaper articles about the event, one using the inverted pyramid style and one using the chronological style.
b. Using a radio or television broadcasting style write a news story, a feature story and a critical review of the event.
c. Take a series of photographs to help tell the story of the event in pictures. Include news photos and feature photos in your presentation. Write a brief synopsis of the event as well as captions for your photos.

5. Find out about three career opportunities in journalism. Pick one and find out the education, training, and experience required for this profession. Discuss this with your counselor, and explain why this profession might interest you.

Boy Scout Merit Badge Requirements

Law

1. Define "law." Tell some of its sources. Describe functions it serves.

2. Discuss TWO of the following:

   a. The Justinian Code, The Code of Hammurabi, and the Magna Carta.
   b. The development of the jury system.
   c. Two famous trials in history.

3. Tell what civil law is; tell what criminal law is. Tell the main differences between them. Give examples of each.

4. Ask five people (not more than one from your immediate family) about the role of law enforcement officers in our society. Discuss their answers with them. Go to a law enforcement officer in your neighborhood and ask about his or her responsibilities and duties. Report your findings.

5. Tell about several laws that were passed to protect the consumer and the seller. Tell about several organizations that provide help to consumers and sellers.

6. Do ONE of the following:

   a. Attend a session of a civil or criminal court. Write 250 words or more on what you saw.
   b. Plan and conduct a mock trial with your troop or school class. After the trial is over, discuss it with the group.

7. Arrange a visit with a lawyer who works for a business, bank, title company, or government agency. Find out his or her duties and responsibilities. Report what you learned.

8. Explain the requirements for becoming a lawyer in your state. Describe how judges are selected in your state.

9. Make a list of 15 jobs which deal with some aspect of law or legal processes. Tell which you prefer. Why?

10. Tell where people can go to obtain the help of a lawyer if they are unable to pay for one. Tell what you can do if you can afford a lawyer but do not know of any in your area.

11. Discuss with your counselor the importance of TWO of the following areas of law that have recently emerged and are still developing:

    a. Environmental law
    b. Computers and the Internet
    c. Copyright and the Internet
    d. Space travel and satellites orbiting the earth

Boy Scout Merit Badge Requirements

Medicine

1. Discuss with your counselor the influence that EIGHT of the following people or events had on the history of medicine:
    A. Hippocrates
    B. William Harvey
    C. Antoine van Leeuwenhoek
    D. Edward Jenner
    E. Florence Nightingale
    F. Louis Pasteur
    G. Gregor Mendel
    H. Joseph Lister
    I. Robert Koch
    J. Daniel Hale Williams
    K. Wilhelm Conrad Roentgen
    L. Marie and Pierre Curie
    M. Walter Reed
    N. Karl Landsteiner
    O. Alexander Fleming
    P. Charles Richard Drew
    Q. Helen RAussig
    R. James Watson and Francis Crick
    S. Jonas Salk

2. Explain the Hippocratic Oath to your counselor, and compare to the original version to a more modern one. Discuss to whom those subscribing to the original version of the oath owe the greatest allegiance.

3. Discuss the health-care provider-patient relationship with your counselor, and the importance of such a relationship in the delivery of quality care to the patient. Describe the role of confidentiality in this relationship.

4. Do the following:
    A. Describe the roles the following people play in the delivery of health care in your state. (Note: Not all may exist in your state.)
        1. Allopathic Physician
        2. Chiropractor
        3. Emergency medical technician
        4. Licensed practical/vocational nurse
        5. Medical assistant
        6. Medical laboratory technologist
        7. Nurse-midwife
        8. Nurse practitioner
        9. Occupational therapist
        10. Optometrist
        11. Osteopathic physician
        12. Pharmacist
        13. Physical therapist
        14. Physician's assistant
        15. Podiatrist
        16. Psychologist
        17. Radiologic technologist
        18. Registered Nurse
        19. Respiratory therapist
    B. Describe the educational and licensing requirements for five of those in 4a --other than 4a(1)- - practicing health care in your state.

5.
    A. Tell what is meant by the term "primary care" with regard to a medical specialty. Briefly describe the types of work done by physicians in the following "core" specialties:
        1. Internal medicine*
        2. Family practice*
        3. Obstetrics/gynecology*
        4. Pediatrics*
        5. Psychiatry
        6. Surgery
    B. Describe the additional educational requirements for these specialties.

6.
    A. Briefly describe the types of work performed by physicians in FIVE of the following specialties or subspecialties:
        1. Allergy/immunology
        2. Anesthesiology

3. Cardiology
4. Colon and rectal surgery
5. Dermatology
6. Emergency Medicine
7. Endocrinology
8. Gastroenterology
9. Geriatric medicine
10. Hematology/oncology
11. Infectious disease
12. Nephrology
13. Neuro surgery
14. Neurology
15. Nuclear medicine
16. Ophthalmology
17. Orthopedic surgery
18. Otolaryngology/head and neck surgery
19. Pathology
20. Physical medicine and rehabilitation
21. Plastic, reconstructive, and maxillofacial surgery.
22. Preventive medicine
23. Radiology
24. Rheumatology
25. Thoracic/cardiothoracic surgery
26. Urology
27. Vascular surgery

B. Describe the additional educational requirements for the five specialties or subspecialties you chose in 6a.

7.

A. Visit a physician's office,** preferably one who delivers "primary care." (This may be that of your counselor.) Discuss the components of a medical history and physical examination (an official BSA health form may be used to guide this discussion), and become familiar with the instruments used.

B. Describe the characteristics of a good diagnostic test to screen for disease (e.g. routine blood pressure measurement). Explain briefly why diagnostic tests are not perfect.

C. Show how to take a blood pressure reading and a pulse reading.

8. Do the following:

A. Discuss the roles medical societies, the insurance industry, and the government play in influencing the practice of medicine in the United States.

B. Briefly tell how your state monitors the quality of health care within its borders, and how it provides care to those who do not have health insurance.

9. Compare and discuss with your counselor the health care delivery systems in the United States, Sweden, and China.

10. Serve as a volunteer at a health-related event or facility in your community (e.g. blood drive, "health fair", blood pressure screening, etc.) approved by your counselor.

* "Primary care" specialties

** If this cannot be arranged, demonstrate to your counselor that you understand the components of a medical history and physical, and discuss the instruments involved.

Boy Scout Merit Badge Requirements

Music

1. Please bring your instrument (if possible) and a book which has songs you are learning. Sing or play a simple song or hymn chosen by your counselor using good technique, phrasing, tone, rhythm, and dynamics. Read all the signs and terms of the score.

2. Name the five general groups of musical instruments. Create an illustration that shows how tones are generated and how instruments produce sound.

3. Do TWO of the following:

   a. Attend a live performance, or listen to three hours of recordings from any two of the following musical styles: blues, jazz, classical, country, bluegrass, ethnic, gospel, musical theater, opera. Describe the sound of the music and the instruments used. Identify the composers or songwriters, the performers, and the titles of the pieces you heard. If it was a live performance, describe the setting and the reaction of the audience. Discuss your thoughts about the music.
   b. Interview your parents and grandparents about music. Find out what the most popular music was when they were your age. Find out what their favorite music is now, and listen to three of their favorite tunes with them. How do their favorites sound to you? Had you ever heard any of them? Play three of your favorite songs for them, and explain to them why you like these songs. Ask them what they think of your favorite music.
   c. Serve for six months as a member of a school band, choir, or other local musical group; or perform as a soloist in public six times.
   d. List five people who are important in the history of American music and explain to your counselor why they continue to be influential. Include at least one composer, one performer, one innovator, and one person born more than 100 years ago.

4. Do ONE of the following:

   a. Teach three songs to a group of people. Lead them in singing the songs, using proper hand motions.
   b. Compose and write the score for a piece of music of 12 measures or more.
   c. Make a traditional instrument and learn to play it.
   d. Catalog your own or your family's collection of 12 or more compact discs, tapes or records. Show how to handle and store them.

We will do #3D in class. Please bring one of the following to satisfy the rest of requirement #3: A program from a live performance you attended, a program from a school concert with your name in it, or a note from your parents documenting completion of this requirement.

Boy Scout Merit Badge Requirements

Personal Management

1. Do the following:

    a. Choose an item that your family might want to purchase that is considered a major expense.
    b. Write a plan that tells how your family would save money for the purchase identified in requirement 1a.
        1. Discuss the plan with your merit badge counselor
        2. Discuss the plan with your family
        3. Discuss how other family needs must be considered in this plan.
    c. Develop a written shopping strategy for the purchase identified in requirement 1a.
        1. Determine the quality of the item or service (using consumer publications or rating systems).
        2. Comparison shop for the item. Find out where you can buy the item for the best price. (Provide prices from at least two different price sources.) Call around; study ads. Look for a sale or discount coupon. Consider alternatives. Can you buy the item used? Should you wait for a sale?

2. Do the following:

    a. Prepare a budget reflecting your expected income (allowance, gifts, wages), expenses, and savings. Track your actual income, expenses, and savings for 13 consecutive weeks. (You may use the forms provided in this pamphlet, devise your own, or use a computer generated version.) When complete, present the results to your merit badge counselor.
    b. Compare expected income with expected expenses.
        1. If expenses exceed income, determine steps to balance your budget.
        2. If income exceeds expenses, state how you would use the excess money (new goal, savings).

3. Discuss with your merit badge counselor FIVE of the following concepts:

    a. The emotions you feel when you receive money.
    b. Your understanding of how the amount of money you have with you affects your spending habits.
    c. Your thoughts when you buy something new and your thoughts about the same item three months later. Explain the concept of buyer's remorse.

d. How hunger affects you when shopping for food items (snacks, groceries).
e. Your experience of an item you have purchased after seeing or hearing advertisements for it. Did the item work as well as advertised?
f. Your understanding of what happens when you put money into a savings account.
g. Charitable giving. Explain its purpose and your thoughts about it.
h. What you can do to better manage your money.

4. Explain the following to your merit badge counselor:

   a. The differences between saving and investing, including reasons for using one over the other.
   b. The concepts of return on investment and risk.
   c. The concepts of simple interest and compound interest and how these affected the results of your investment exercise.

5. Select five publicly traded stocks from the business section of the newspaper. Explain to your merit badge counselor the importance of the following information for each stock:

   a. Current price
   b. How much the price changed from the previous day
   c. The 52-week high and the 52-week low prices

6. Pretend you have $1,000 to save, invest, and help prepare yourself for the future. Explain to your merit badge counselor the advantages or disadvantages of saving or investing in each of the following:

   a. Common stocks
   b. Mutual funds
   c. Life insurance
   d. A certificate of deposit (CD)
   e. A savings account or U.S. savings bond

7. Explain to your merit badge counselor the following:

   a. What a loan is, what interest is, and how the annual percentage rate (APR) measures the true cost of a loan.
   b. The different ways to borrow money.
   c. The differences between a charge card, debit card, and credit card. What are the costs and pitfalls of using these financial tools? Explain why it is unwise to make only the minimum payment on your credit card.
   d. Credit reports and how personal responsibility can affect your credit report.
   e. Ways to reduce or eliminate debt.

8. Demonstrate to your merit badge counselor your understanding of time management by doing the following:

a. Write a "to do" list of tasks or activities, such as homework assignments, chores, and personal projects, that must be done in the coming week. List these in order of importance to you.
b. Make a seven-day calendar or schedule. Put in your set activities, such as school classes, sports practices or games, jobs or chores, and/or Scout or church or club meetings, then plan when you will do all the tasks from your "to do" list between your set activities.
c. Follow the one-week schedule you planned. Keep a daily diary or journal during each of the seven days of this week's activities, writing down when you completed each of the tasks on your "to do" list compared to when you scheduled them.
d. Review your "to do" list, one-week schedule, and diary/journal to understand when your schedule worked and when it did not work. With your merit badge counselor, discuss and understand what you learned from this requirement and what you might do differently the next time.

9. Prepare a written project plan demonstrating the steps below, including the desired outcome. This is a project on paper, not a real-life project. Examples could include planning a camping trip, developing a community service project or a school or religious event, or creating an annual patrol plan with additional activities not already included in the troop annual plan. Discuss your completed project plan with your merit badge counselor.

a. Define the project. What is your goal?
b. Develop a timeline for your project that shows the steps you must take from beginning to completion.
c. Describe your project.
d. Develop a list of resources. Identify how these resources will help you achieve your goal.
e. If necessary, develop a budget for your project.

10. Do the following:

a. Choose a career you might want to enter after high school or college graduation.
b. Research the limitations of your anticipated career and discuss with your merit badge counselor what you have learned about qualifications such as education, skills, and experience.

Boy Scout Merit Badge Requirements

Photography

1. Explain how the following elements and terms affect the quality of a picture:

    a. Light-natural light/ambient, flash
    b. Exposure-aperture (f-stops), shutter speed, depth of field
    c. Composition-rule of thirds, leading lines, framing, depth
    d. Angle of view
    e. Stopping action

2. Explain the basic parts and operation of a film camera or digital camera. Explain how an exposure is made when you take a picture.

3. Discuss with your counselor the differences between a film camera and a digital camera. List at least five advantages and five disadvantages of using a digital camera versus using a film camera.

4. Do ONE of the following:

    a. Produce a picture story using the photojournalistic technique of documenting an event. Share your plan with your counselor and get your counselor's input and approval before you proceed. Then, using either a film camera or a digital camera, produce your approved picture story. Process your images and select eight to 12 images that best tell your story. Arrange your images in order, then mount the prints on a poster board. If you are using digital images, you may create a slide show on your computer or produce printouts for your poster board. Share your picture story with your counselor.
    b. Choose a topic that interests you to photograph for an exhibit or display. Get your counselor's approval, then photograph (digital or film) your topic. Process your images. Choose 20 of your favorite images and mount them on poster board. Share your display with your counselor. If you are using digital images, you may create a slide show on your computer or produce printouts for your poster board.

5. Discuss with your counselor the career opportunities in photography. Pick one that interests you and explain how to prepare for such a career. Discuss with your counselor the education and training such a career would require

Boy Scout Merit Badge Requirements

Plumbing

1. Do the following:

   a. Describe how a properly working plumbing system protects our family's health and safety.
   b. List five important local health regulations related to plumbing and tell how they protect health and safety.
   c. Describe the safety precautions you must take when making home plumbing repairs.

2. Do the following:

   a. Make a drawing and explain how a home hot- and cold- water supply system works. Tell how you would make it safe from freezing.
   b. Make a drawing and explain the drainage system of the plumbing in a house. Show and explain the use of drains and vents.

3. Show how to use five important plumber's tools.

4. Identify and describe the use of each of the following: washer, retaining nut, plunger (rubber force cup), solder, flux, elbow, tee, nipple, coupling, plug, union, trap, drainpipe, and water meter.

5. Name the kinds of pipe that are used most often in a plumbing system. Explain why these pipes are used.

6. Cut, thread, and connect two pieces of steel pipe.

7. Under the supervision of a knowledgeable adult, solder three copper tube connections using a gas torch. Include one tee, two straight pieces, and one coupling.

   Do the following:
   a. Replace a washer in a faucet.
   b. Clean out a sink or lavatory trap.

Boy Scout Merit Badge Requirements

Skating

This class will use in-line and roller skates.

1. Show that you know first aid for injuries or illnesses that may occur while skating, including hypothermia, frostbite, lacerations, abrasions, fractures, sprains and strains, blisters, heat reactions, shock, and cardiac arrest.

2. Complete ALL of the requirements for ONE of the following options,
    - **Ice Skating**
        A. Do the following:
            1. Give general safety and courtesy rules for ice skating.Discuss preparations that must be taken when skating outdoors on natural ice. Explain how to make an ice rescue.
            2. Discuss the parts and functions of the different types of ice skates.
            3. Describe the proper way to carry ice skates.
            4. Describe how to store skates for long periods of time, such as seasonal storage.

        B. Do the following:
            1. Skate forward at least 40 feet and come to a complete stop. Use either a two-footed snowplow stop or a one-footed snowplow stop.
            2. After skating forward, glide forward on two feet, then on one foot, first right and then left.
            3. Starting from a T position, stroke forward around the test area, avoiding the use of toe picks if wearing figure skates,

        C. Do the following:
            1. Glide backward on two feet for at least two times the skater's height.
            2. Skate backward for at least 20 feet on two skates.
            3. After gaining forward speed, glide forward on two feet, making a turn of 180 degrees around a cone, first to the right and then to the left.

        D. Do the following:
            1. Perform a forward shoot-the-duck until you’re nearly stopped. Rise while still on one foot.
            2. Perform forward crossovers in a figure eight pattern.
            3. Take part in a relay race.
            4. Perform a hockey stop.

- **Roller Skating**
  A. Do the following:
     1. Give general safety and etiquette rules for roller skating.
     2. Discuss the parts and functions of the roller skate.
     3. Describe five essential steps to good skate care.
  B. Do the following:
     1. Skate forward with smooth, linked strokes on two feet for at least 100 feet in both directions around the rink and demonstrate proper techniques for stopping.
     2. Skate forward and glide at least 15 feet on one skate, then on the other skate.
  C. Do the following:
     1. Perform the crosscut.
     2. Skate backward for at least 40 feet on two skates, then for at least 15 feet on one skate.
     3. Skate forward in a slalom pattern for at least 40 feet on two skates, then for at least 20 feet on one skate.
     4. Skate backward in a slalom pattern for at least 15 feet on two skates.
  D. Do the following:
     1. Shuttle skate once around the rink, bending twice along the way without stopping.
     2. Perform a widespread eagle.
     3. Perform a mohawk.
     4. Perform a series of two consecutive spins on skates, OR hop, skip, and jump on skates for at least 10 feet.
  E. Do the following:
     1. Race on a speed track, demonstrating proper technique in starting, cornering, passing, and pacing.
     2. Perform the limbo under a pole placed at least chest-high OR shoot-the-duck under a waist-high pole and rise while still on one foot.
     3. Perform the stepover.
     4. While skating, dribble a basketball the length of the floor, then return to your starting position, OR push a hockey ball with a stick around the entire rink in both directions.

- **In-Line Skating**
  A. Do the following:
     1. Give general and in-line skating safety rules and etiquette.
     2. Describe the parts and functions of the in-line skate.
     3. Describe the required and recommended safety equipment.
     4. Describe four essential steps to good skate care.
  B. Do the following:
     1. Skate forward with smooth, linked strokes on two feet for at least 100 feet.
     2. Skate forward and glide at least 15 feet on one skate, then on the other skate.
     3. Stop on command on flat pavement using the heel brake.
  C. Do the following:
     1. Perform the forward crossover.
     2. Perform a series of forward, linked swizzles for at least 40 feet.
     3. Skate backward for at least 40 feet in a series of linked, backward swizzles.
     4. From a strong pace, perform a lunge turn around an object predetermined by your counselor.
     5. Perform a mohawk.
  D. Do the following:
     1. Perform a series of at least four one-footed downhill slaloms on pavement with a gentle slope.
     2. Describe how to pass a pedestrian or another skater from behind.
     3. Describe at least three ways to avoid an unforeseen obstacle while skating.
     4. Describe two ways to get on. and off a curb, and demonstrate at least one of these methods.

Boy Scout Merit Badge Requirements

Space Exploration

1. Tell the purpose of space exploration and include the following:

    a. Historical reasons
    b. Immediate goals in terms of specific knowledge
    c. Benefits related to Earth resources, technology, and new products.

2. Design a collector's card, with a picture on the front and information on the back, about your favorite space pioneer. Share your card and discuss four other space pioneers with your counselor.

3. Build, launch, and recover a model rocket.* Make a second launch to accomplish a specific objective. (Rocket must be built to meet the safety code of the National Association of Rocketry. See the "Model Rocketry" chapter of the *Space Exploration* merit badge pamphlet.) Identify and explain the following rocket parts:

    a. Body tube
    b. Engine mount
    c. Fins
    d. Igniter
    e. Launch lug
    f. Nose cone
    g. Payload
    h. Recovery system
    i. Rocket engine

4. Discuss and demonstrate each of the following:

    a. The law of action-reaction.
    b. How rocket engines work
    c. How satellites stay in orbit
    d. How satellite pictures of Earth and pictures of other planets are made and transmitted.

5. Do TWO of the following:

    a. Discuss with your counselor an unmanned space exploration mission and an early manned mission. Tell about each mission's major discoveries, its importance, and what we learned from it about the planets, moons, or regions of space explored.

b. Using magazine photographs, news clippings, and electronic articles (such as from the Internet), make a scrapbook about a current planetary mission.
c. Design an unmanned mission to another planet or moon that will return samples of its surface to Earth. Name the planet or moon your spacecraft will visit. Show how your design will cope with the conditions of the planet's or moon's environment.

6. Describe the purpose and operation of ONE of the following:

   a. Space shuttle
   b. International Space Station

7. Design an inhabited base located on the Moon or Mars. Make drawings or a model of your base. In your design, consider and plan for the following:

   a. Source of energy
   b. How it will be constructed
   c. Life-support system
   d. Purpose and function

8. Discuss with your counselor two possible careers in space exploration that interest you. Find out the qualifications, education, and preparation required and discuss the major responsibilities of those positions.

   * If local laws prohibit the launching of model rockets, do the following activity: Make a model of a NASA rocket. Explain the functions of the parts. Give the history of the rocket.

Boy Scout Merit Badge Requirements

Traffic Safety

1. Do the following:
    A. Describe the top 10 mistakes new drivers frequently make. Name the two items you are required by law to carry with you whenever you operate a motor vehicle.
    B. Describe how alcohol and other drugs affect the human body and why a person should never drink and drive, or drive while under the influence of any mind-altering substances, including prescription drugs, cold medications, and illicit drugs. For the state where you live, find out what is. the legal blood alcohol concentration and the consequences for driving while intoxicated or driving under the influence. Find out what the open-container law is in your state.
    C. Describe at least four factors to be considered in the design of a road or highway. Explain how roadside hazards and road conditions contribute to the occurrence and seriousness of traffic crashes.
    D. Explain why a driver who is fatigued or distracted should not operate a motor vehicle. List five common distractions, explain how driver distractions contribute to traffic accidents, and tell how drivers can minimize distractions. Describe how volunteer drivers can plan to be alert when transporting Scouting participants.

2. Do the following:
    A. Demonstrate how to properly wear a lap or shoulder belt . Explain why it is important for drivers and passengers to wear safety belts at all times.
    B. List five safety features found in motor vehicles besides occupant restraint systems. Describe each safety feature, how each works, and how each contributes to safety.

3. Do the following :
    A. Using your family car or another vehicle, demonstrate that all lights and lighting systems in the vehicle are working. Describe the function and explain why each type of light is important to safe driving.
    B. Using your family car or another vehicle, demonstrate how to check tire pressure and identify the correct tire pressure for the vehicle. Explain why proper tire pressure is important to safe driving.
    C. Demonstrate a method to check for adequate tire tread. Explain why proper tire tread is important to safe driving.
    D. Demonstrate with a smear-and-clear test if the windshield wiper blades will clear the windshield completely or need to be replaced. Describe instances in good and bad weather when windshield washers are important to safe driving.

4. Do the following:
    A. In a location away from traffic hazards, measure with a tape measure - not in a car - and mark off with stakes the distance that a car will travel during the time needed for decision and reaction, and the braking distances necessary to stop a car traveling 30, 50, and 70 miles per hour on dry, level pavement. Discuss how environmental factors such as bad weather and road conditions will affect the distance.
    B. Demonstrate the difference in nighttime visibility between a properly lit bicycle and rider (or a pedestrian) wearing reflective material and a bicycle and rider with no lights (or a pedestrian) dressed in dark clothing, without reflective material.
    C. Explain how color and shape are used to help road users recognize and understand the information presented on traffic and roadway signs. Explain the purpose of different types of signs, signals, and pavement markings.
    D. Describe at least three examples of traffic laws that apply to drivers of motor vehicles and that bicyclists must also obey.

5. Do ONE of the following:
    A. Interview a traffic law enforcement officer in your community to identify what three traffic safety problems the officer is most concerned about. Discuss with your merit badge counselor possible ways to solve one of those problems.
    B. Using the Internet (with your parent's permission), visit five Web sites that cover safe driving for teenagers. As a group, discuss what you learn with your counselor and at least three other teenagers.
    C. Initiate and organize an activity or event to demonstrate the importance of traffic safety.
    D. Accompanied by an adult and a buddy, pick a safe place to observe traffic at a controlled intersection (traffic signal or stop sign) on three separate days and at three different times of the day, for 30 minutes on each visit. At this intersection, survey (1) such violations as running a red light or stop sign; or (2) seat belt usage. Count the number of violations or number of drivers not wearing a seat belt. Record in general terms if the driver was young or old , male or female . Keep track of the total number of vehicles observed so that you can determine the percentage of compliance vs. violations. Discuss the findings with your merit badge counselor.

Boy Scout Merit Badge Requirements

Veterinary Medicine

1. Discuss with your counselor the roles a veterinarian plays in the following:
    A. Companion or small animal medicine, and equine medicine
    B. Food animal or large animal medicine
    C. Exotic animal medicine
    D. Marine animal medicine (mammal and fish)
    E. Poultry medicine
    F. Wildlife medicine and aquaculture medicine

2. Discuss with your counselor the roles a veterinarian plays in the following:
    A. Public health medicine and zoonotic disease surveillance and control
    B. The military
    C. Food safety and inspection
    D. Laboratory animal medicine and research
    E. Teaching and government

3. Describe the training required to become a veterinarian. Where is the veterinary medical college nearest you? Describe the prerequisites for applying to veterinary school.

4. Tell your counselor what a registered veterinary technician (R.T.V.) or animal health technician (A.H.T.) is. Describe the training required to become an R.V.T. or A.H.T. Where is the school or facility for R.V.T. or A.H.T training nearest you? Describe the role an R.V.T. or A.H.T. would play in assisting a veterinarian working in three of the practice types listed in requirement 1.

5. Discuss with your merit badge counselor the role a veterinarian plays in the human-animal bond.

6. Do ONE of the following:
    A. Visit a veterinary clinic, hospital, or veterinary referral teaching hospital that does work in one of the practices listed in requirement 1. Spend as much time as you can observing the veterinarians and their staff. Write a report on what you observed and learned at the facility. Share your report with your counselor.
    B. Spend as much time as possible with a veterinarian who works in one of the fields listed in requirement 2. Learn what special training beyond veterinary medical school may have been required for that position. Learn about any special or unusual activities required of this position. Write a report on what you have learned about this field of veterinary medicine. Include in your report how this field serves the needs of the general public. Share your report with your counselor.

Boy Scout Merit Badge Requirements

Weather

1. Define meteorology. Explain what weather is and what climate is. Discuss how the weather affects farmers, sailors, aviators, and the outdoor construction industry. Tell why weather forecasts are important to each of these groups.

2. Name five dangerous weather-related conditions. Give the safety rules for each when outdoors and explain the difference between a severe weather watch and a warning. Discuss the safety rules with your family.

3. Explain the difference between high and low pressure systems in the atmosphere. Tell which is related to good and to poor weather. Draw cross sections of a cold front and a warm front, showing the location and movements of the cold and warm air, the frontal slope, the location and types of clouds associated with each type of front, and the location of precipitation.

4. Tell what causes wind, why it rains, and how lightning and hail are formed.

5. Identify and describe clouds in the low, middle, and upper levels of the atmosphere. Relate these to specific types of weather.

6. Draw a diagram of the water cycle and label its major processes. Explain the water cycle to your counselor.

7. Define acid rain. Identify which human activities pollute the atmosphere and the effects such pollution can have on people.

8. Do ONE of the following:

    a. Make one of the following instruments: wind vane, anemometer, rain gauge, hygrometer. Keep a daily weather log for one week using information from this instrument as well as from other sources such as local radio and television stations, NOAA Weather Radio, and Internet sources (with your parent's permission). Record the following information at the same time every day: wind direction and speed, temperature, precipitation, and types of clouds. Be sure to make a note of any morning dew or frost. In the log, also list the weather forecasts from radio or television at the same time each day and show how the weather really turned out.
    b. Visit a National Weather Service office or talk with a local radio or television weathercaster, private meteorologist, local agricultural extension service officer, or university meteorology instructor. Find out what type of weather is most

dangerous or damaging to your community. Determine how severe weather and flood warnings reach the homes in your community.

9. Do ONE of the following:

   a. Give a talk of at least five minutes to a group (such as your unit or a Cub Scout pack) explaining the outdoor safety rules in the event of lightning, flash floods, and tornadoes. Before your talk, share your outline with your counselor for approval.
   b. Read several articles about acid rain and give a prepared talk of at least five minutes to a group (such as your unit or a Cub Scout pack) about the articles. Before your talk, share your outline with your counselor for approval.

10. Find out about a weather-related career opportunity that interests you. Discuss with and explain to your counselor what training and education are required for such a position, and the responsibilities required of such a position.